Diritti riservati | All rights reserved

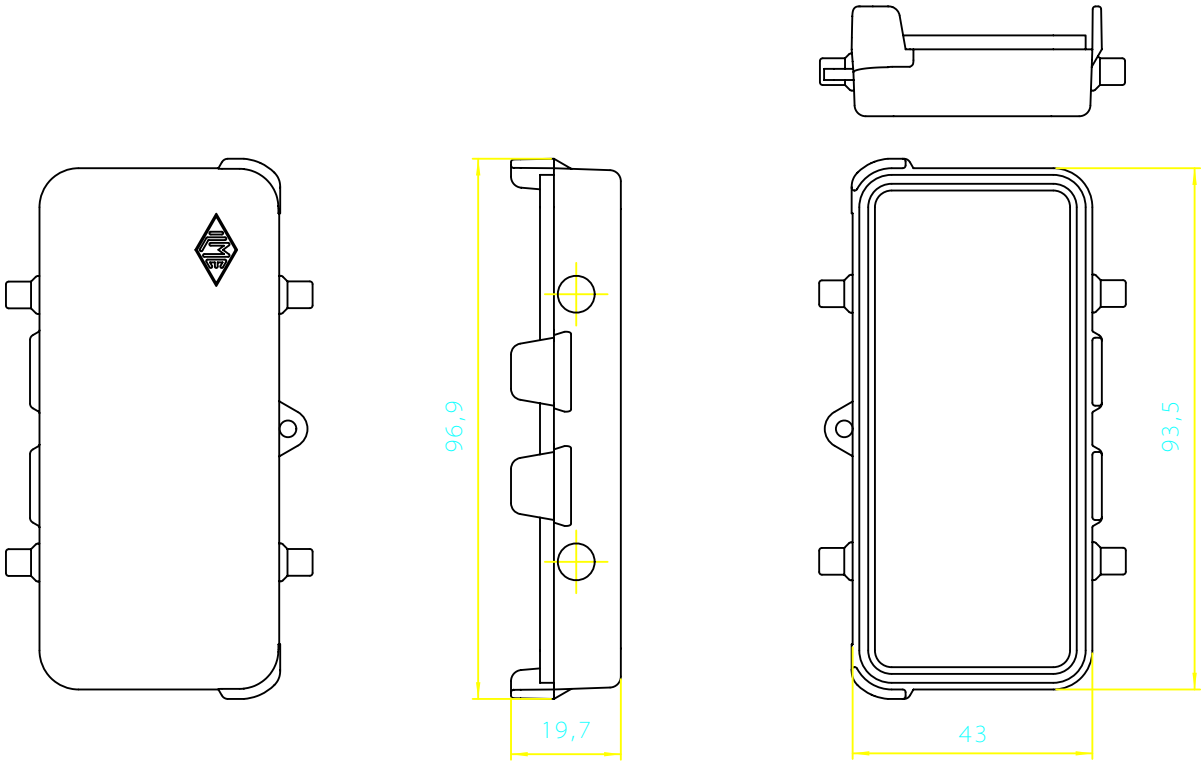

dimensions in mm	CHCN 16	Scale
Date 27/06/14	Cover with pegs - LS-TYPE	1:1
Sign. Pezzimenti		